OUR VISION FOR DESIGN

Our aim: to significantly reduce the efforts of operators when handling generators and shielded pots and containers, in order to minimise the risk of MusculoSkeletal Disorders (MSD).

The Easylift motorised kart stands out for its ergonomics and radiation protection. It's the essential tool for nuclear medicine professionals.

EASYLIFT KART

MOTORISED LIFT TROLLEY FOR EFFORTLESS UNBOXING, TRANSPORTING AND INSTALLING SHIELDED CONTAINERS IN HOT CELLS

ASSOCIATED PRODUCTS

- Posisafe® Pb30 shielded container
- Posisafe® KL-30 shielded container

ALL **ENERGIES**

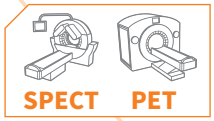

PATENTED





Posisafe® Pb30

This product may not yet be licensed/available for sale in your country. Due to local compliance, their availability cannot be guaranteed. Please contact your local Lemer Pax distributor for further details. Sales document.

Easylift is an **ergonomic shielded motorised kart**, specifically designed to free yourself from handling heavy loads during the 3 essential uses in a Nuclear Medicine department: **unpacking/packaging, transporting and loading/unloading shielded containers** (compatible with generators: UTK - UltraTechneKow™ and others on request / compatible with shielded pots: AAA, Cyclopharma, Posisafe® and others on request) into radiopharmaceutical preparation equipment such as the Easypharma Compact® shielded hot cell or the preparator-injector Posijet®.

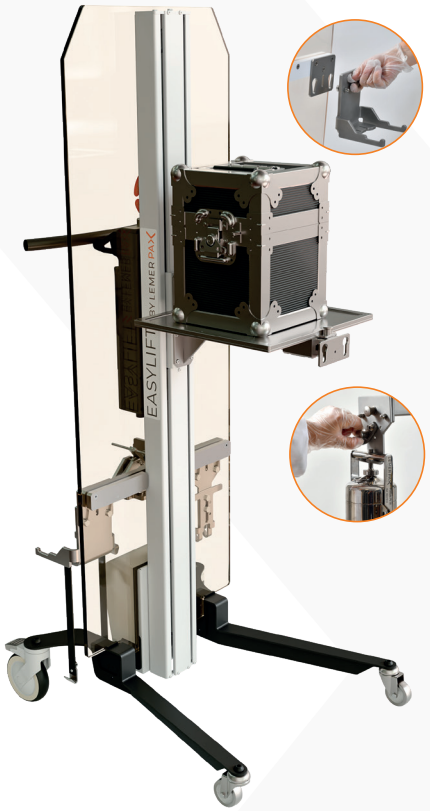

Its robust design in high-grade 304L stainless steel ensures greater resistance over time and quick, easy maintenance. Easylift also offers **optimum radiation protection** for users throughout the operation.

The manoeuvrability of the system means it can be easily docked to preparation equipments. Compact and easy to use, **it is the ideal tool** for minimising the effort required of operators, **while making it easier and safer to install shielded containers in nuclear medicine preparation equipment**.

Easylift has a lifting capacity of 30 kg, it is equipped with an anti-crushing system and is powered by a Lithium 24 V - 10 Ah rechargeable battery. This powerful battery provides up to 300 cycles per charge. Besides, Easylift offers the flexibility of continuous operation thanks to interchangeable batteries coupled with a battery charge indicator.

FOCUS

Multi-task, the Easylift is compatible with a wide range of interchangeable quick-attach tools adapted to the different models of shielded containers, to ergonomically assist operators in their use:

- **a multi-purpose tray** for transporting nuclear medicine accessories,
- **a gripper for installing generators** in preparation hot cells used in Nuclear Medicine,
- **a gripper for installing shielded pots** in preparation equipments,
- our teams are able to design other accessories on request and following feasibility studies.

Operator-side storage space is available for easy access to interchangeable tools.

CHARACTERISTICS

Général
Overall dimensions: L 600 x D 765 x H 1,558 mm
Component parts: - 304L stainless steel frame - 4 wheels (2 with brakes) - Lifting tool - Battery charger (with 2 batteries)
Radiation protection: Transparent shielded organic screen and shielding: 0.5 mm lead eq.
Ground dimensions: L 384 x D 193 x H 60 mm
Ground clearance in low position: 46 mm
Nominal load capacity: 30 kg
Lifting: electric with a sensitive ramp-up control
Lifting height: 1,200 mm

Battery life: 300 cycles
Battery voltage and capacity: Lithium 24V - 10Ah
Charger power supply: 220V
Weight: 64 kg
Option
UTK tool (ref: 00062062)
Shielded pot tool (ref: 00063416)
Drawer locking kit (ref: 00067617)
Package
Package dimensions: contact us
Package weight: contact us
Ref.: 00057546

EFFECTIVE DIMENSIONS (mm)

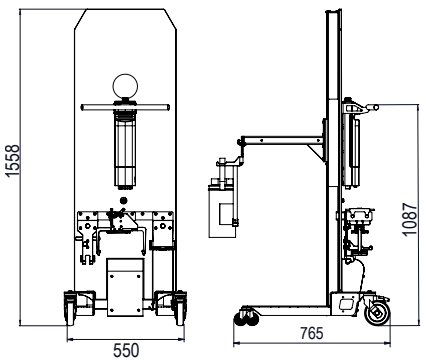

+33 (0) 2 40 25 24 04 - contact@lemerpax.com

This product may not yet be licensed/available for sale in your country. Due to local compliance, their availability cannot be guaranteed. Please contact your local Lemer Pax distributor for further details. Sales document.