THERANOJET®ARA

INJECTION PUMP SHIELD
FOR THERANOSTIC PRODUCTS

^{177}Lu ^{161}Tb ^{223}Ra ^{225}Ac ^{211}At

RLT PATENTED

A COLLABORATION
LEMER PAX
&
Hôpital Beaujon AP-HP
ASSISTANCE PUBLIQUE HÔPITAUX DE PARIS

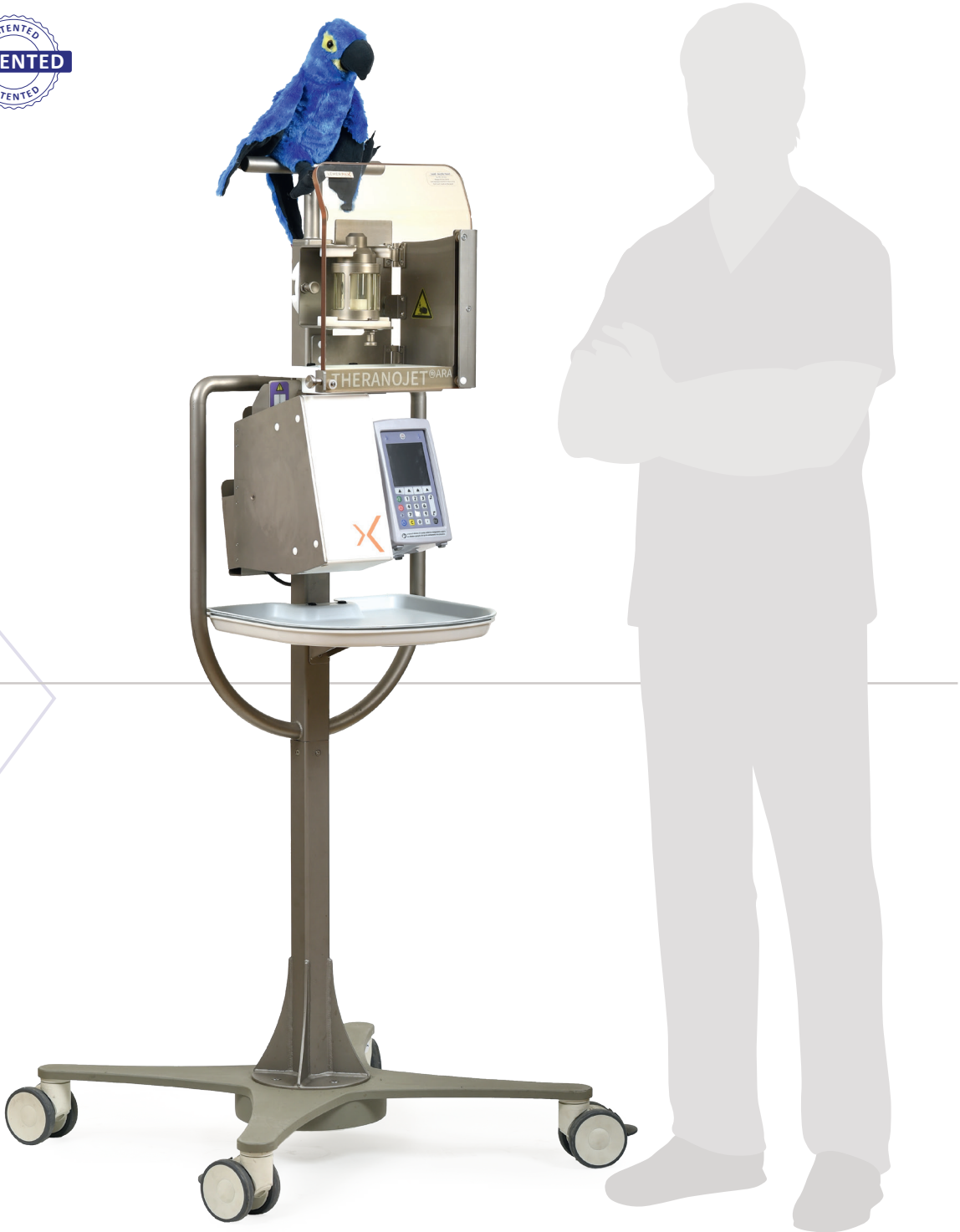

This product may not yet be licensed/available for sale in your country. Due to local compliance, their availability cannot be guaranteed. Please contact your local Lemer Pax distributor for further details. Sales document.



RadioLigand Therapy (RLT) offers new perspectives for treating malignant tumours by precisely targeting cancer cells while preserving surrounding healthy tissue.

This approach is part of the growing field of theranostics, which aims to improve cancer treatment by combining diagnostic tests that analyse a patient's tumour activity on an individual basis with targeted therapies tailored to their specific cancer.

However, the slow administration of these treatments requires optimised radiation protection and a safe and convenient injection system for healthcare personnel. Specifically designed for RadioLigand Therapy (RLT), the Theranojet®ARA includes a sterile, needle-free transfer device to minimise contamination and needle-stick injuries.

Developed in collaboration with the parisian Beaujon AP-HP (Assistance Publique - Hôpitaux de Paris) Hospital, the Theranojet®ARA is a **injection pump shield** designed for the radiation protected intravenous administration of radiopharmaceutical drugs for **RadioLigand Therapy (RLT)** labelled in particular with **^{177}Lu**.

Lightweight, mobile and versatile, the pump injection shield Theranojet®ARA allows the user to safely load radiopharmaceuticals, using a removable shielded container, facilitating transport and loading of the vial within the hot lab.

In order to guarantee medical staff complete safety during administration, and to prevent any risk of injection in case of extravasation or injection of air bubbles, the THERANOJET®ARA is equipped with an infusion pump that can detect occlusions or air bubbles.

This **lightweight** unit with 4 double castor wheels, is easy to handle and to move around. Its two side handles allow it to be moved effortlessly to carry patient doses to the injection cubicles.

It is made entirely of stainless steel, and includes several removable containment trays, allowing for simple and quick microbiological or radioactive decontamination, when required, without altering the injection shield components.

REGULATORY FRAMEWORK

Theranojet®ARA injection pump shield for theranostic products complies with the general safety and performance requirements laid down in **European Medical Device Regulation (EU) 2017/745** concerning the design, manufacture and placing on the market.

The device was designed to protect people against ionising radiation pursuant to **Directive 2013/59 of 5 December 2013**, laying down basic safety standards for health protection against hazards resulting from exposure to ionising radiation

ASSOCIATED PRODUCTS

- Mobile Therapy and Diagnosis toilet
- Positong handling tong
- Easypharma Compact shielded hot cell

CONSUMABLES



Spike



Vial kit



Pump kit

Complete patient injection kit
Ref.: 00055414

+33 (0) 2 40 25 24 04 - contact@lemerpax.com

This product may not yet be licensed/available for sale in your country. Due to local compliance, their availability cannot be guaranteed. Please contact your local Lemer Pax distributor for further details. Sales document.

FOCUS



Intravenous bag holders [**1**] are designed to suspend solute bags and facilitate dose dilution as well as IV tube rinsing.

The support [**2**] **and vial shield** [**3**] enables the vial to be inverted, ensuring that all the content is fully administered. This system allows direct loading of the therapy vial using a needleless transfer device. This reduces the risk of contamination, needle stick injuries and allows for a safe location for the dose to decay.



The higher removable containment tray [**4**] makes it possible to contain the radiopharmaceutical in the event of a possible connection problem between the vial and the needleless transfer device. The tray is non-porous and easily removable, making microbiological and radioactive decontamination easier.



The upper shielding [**5**] protects the user during the injection. The transparency of shielded organic glass makes the tubing and the retention area visible, yet still accessible throughout the operation. The glass and shield are on a hinge, allowing the user to easily access the vial or tubing. Its curved shape provides radiation protection for the user in a standing position, ensuring maximum protection for the areas most sensitive to radiation, such as the lens of the eye.

The side handles [**6**] make it easy to guide the device. It has a large gripping area that can be adjusted to the height of the healthcare personnel.

The lower shielding [**7**] made of lead provides radiation protection to the user during the injection and rinsing phase.

The dual-line pump [**8**] has an adjustable screen allowing the user to easily visualize and program the infusion settings. Dual channels allow the vial to be rinsed 'hands-free' using the second line to ensure the entire radiopharmaceutical dose is administered to the patient with little to no residual. During infusion, the pump will alert for any occlusions, extravasations or air bubbles, as well as indicate remaining volume to be infused. The two lines of the pump enable a more gradual injection of the radiopharmaceutical with optimal operator radiation protection while improving the patient comfort and treatment tolerance. The use of a dual-channel pump also allows for volume concentration monitoring, thanks to the individual flow control of each channel.
For optimal comfort, the pump is installed at an ergonomic height, allowing the operator to use it naturally, effortlessly and without awkward postures. This avoids the need to bend over, thus preserving the operator's health and efficiency by reducing the risk of musculoskeletal disorders (MSDs).



The anti-disconnection security [**9**] ensures a firm and reliable hold on the secure connector, eliminating any risk of accidental disconnection. Designed to meet the most stringent requirements of nuclear medicine, it guarantees perfect circuit continuity, enhancing both procedural safety and radiation protection for operators.

The lower removable containment tray [**10**] makes it possible to contain the radiopharmaceutical in the event of a possible handling problem with the dual pump. The tray is non-porous and easily removable, making microbiological and radioactive decontamination easier.



The 4 castor wheels make it easy to move the device. It is possible to lock the wheels to ensure that the device cannot be moved.

This product may not yet be licensed/available for sale in your country. Due to local compliance, their availability cannot be guaranteed. Please contact your local Lemer Pax distributor for further details. Sales document.

PREPARATION EQUIPMENT



The shielded vial connection installation device is specially designed to secure the critical step of inserting the spike into the vial. Thanks to its integrated push button, it allows for precise, stable and effortless insertion, thereby reducing the risks of direct manual handling. Used within a shielded hot cell, it offers optimal protection for the operator while ensuring the compliance and reliability of the injection kit installation.

ref.: 00051943



The vial connection removal tong ensures safe removal of the spike at the end of injection, while minimising effort and risky movements for the operator

ref.: 00055988



The shielded cover for vial decay is specially designed to ensure safe storage and decay of the vial at the end of injection. Perfectly suited to the shielded pots used in RadioLigand Therapy (RLT) procedures, it offers optimal protection against radiation.

ref.: 00054547



CHARACTERISTICS

General
External dimensions (with serum rod): L 712 x D 759 x H 1,670 mm
Shielding thickness: - Transparent organic screen: 0.5 mm of lead eq. - Lower housing made of lead: eq. 2mm
Component parts: - Dual-pouch serum rod - Rotating vial shield support with safety features - Mobile frame - Protective screen (Shielded organic glass screen dim. : L 358 x H 292 mm) - Lead protective housing - Removable containment trays - Anti-disconnection security - Document holder - 2 castor wheels and 2 castor wheels with brakes - Injection kit support
Material: 304L stainless steel frame and serum rod
Weight: 94 kg

Radiation protection	
Maximum radioactivity that can behandled to obtain a dose rate less than 100µSv/h at 5 cm from the walls*	
Radionuclides	**Activity**
^{177}Lu	7,400 MBq

Integrated equipments
Injection pump
Patient injection kit (ref. 00055414)
Vial shield (ref. 00050036): - Shielding thickness: 16 mm lead glass and 7 mm of lead - Vial volume: 30 mL - Weight with its cap: 3.1 kg
Shielded installation system of vial shield connection (ref.: 00051943)
Removal tongs of vial shield connection (ref.: 00055988)
Shielded cover for decay (ref.: 00054547)

Options
Shielded container for vial shield transportation

Package
Package dimensions: L 1,250 x D 800 x H 650 mm
Package weight: 180 kg
Ref.: 00055989

EFFECTIVE DIMENSIONS (mm)

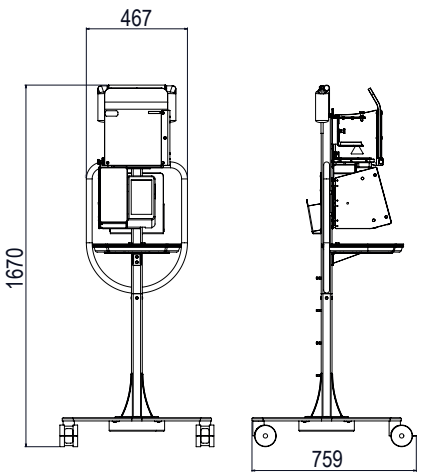

*Regulations in ASNR Guide No.32 "In vivo nuclear medicine facilities: minimum technical rules for design, operation and maintenance"

+33 (0) 2 40 25 24 04 - contact@lemerpax.com

This product may not yet be licensed/available for sale in your country. Due to local compliance, their availability cannot be guaranteed. Please contact your local Lemer Pax distributor for further details. Sales document.